LOW HEAD HYDRO TURBINES

Joule Centre Annual Conference

Small Hydro Power Schemes in the North West of England: Overcoming the Barriers

3rd April 2008 at Rheged Centre

Dieter Krompholz / Sales / Compact Hydro

Agenda

- Definition - low head (application range)
- Special aspects of low head applications
- Risks of low head applications
- Possible turbine types for low head application
- Fish-friendly turbine concept – some aspects
- Examples and references of low head applications
- Summary

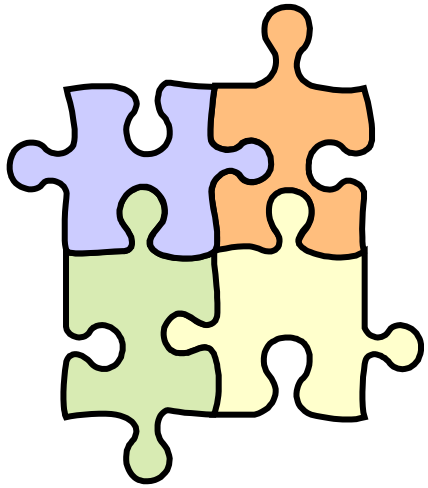

Definition - low head (application range)

- Heads - approx. 2 to 35 m
- Flows - approx. 0.3 to 100 m^3/s

- General turbine types
  - Axial turbine
  - OR
  - Radial turbine – Francis
  - (for “higher” low heads)

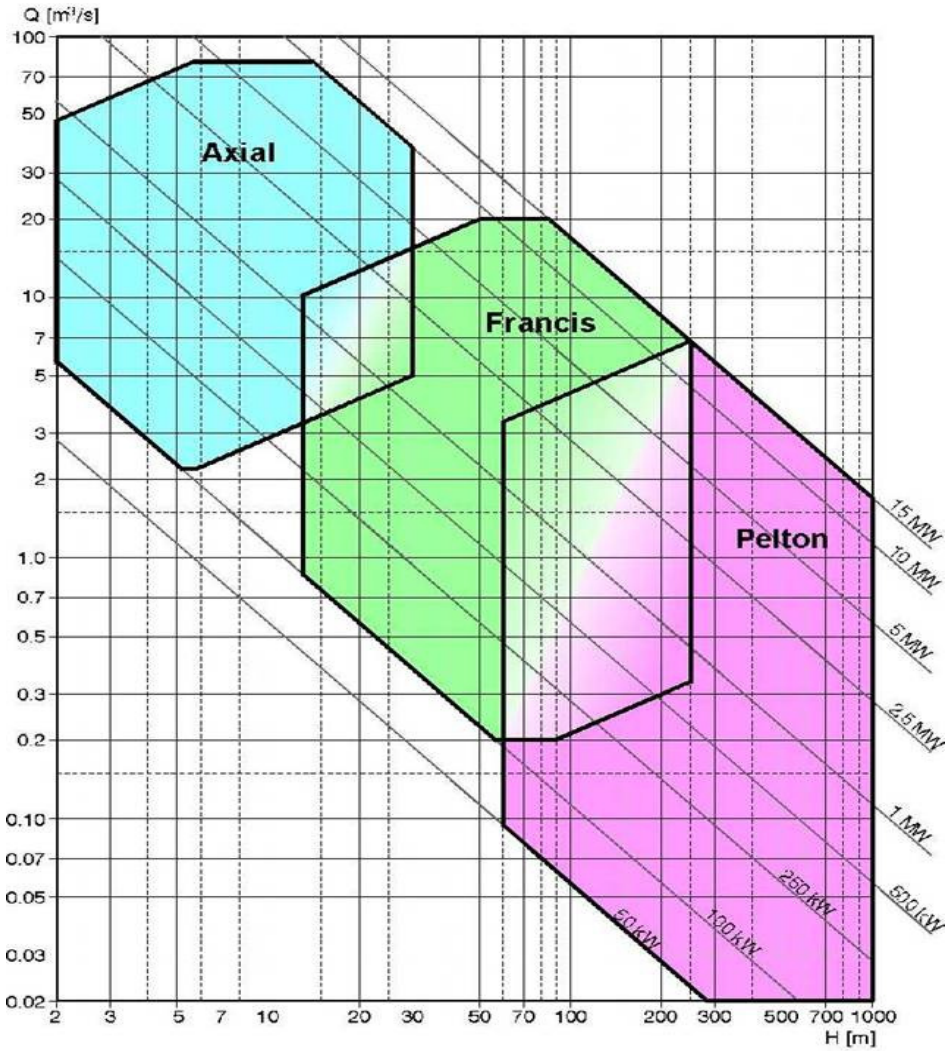

Compact Hydro application range

Special aspects of low head applications

- „Flat“ landscapes
- often running river plant
- very often a dam / weir needed
- „polluted“ water (e.g. grass, algea, „garbage“, …)
- old mill places or similar
- generally low speed turbines > „expensive“ generators if direct-coupled
- ecological aspects > e.g. fish friendliness
  - Fish ladder
  - fish-friendly turbine concept

Risks of low head applications

- the lower the head the more important the design of the intake & draft tube side is
  - „incorrect“ design can destroy fairly easily the net head and performance
  - how (flow, velocity) the water streams in and out the turbine is essential
    - use an experienced consultant and turbine supplier
    - investigate before concreting

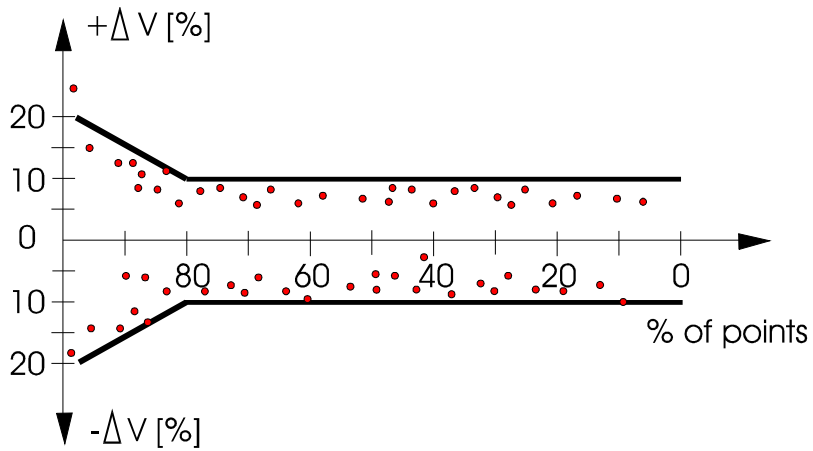

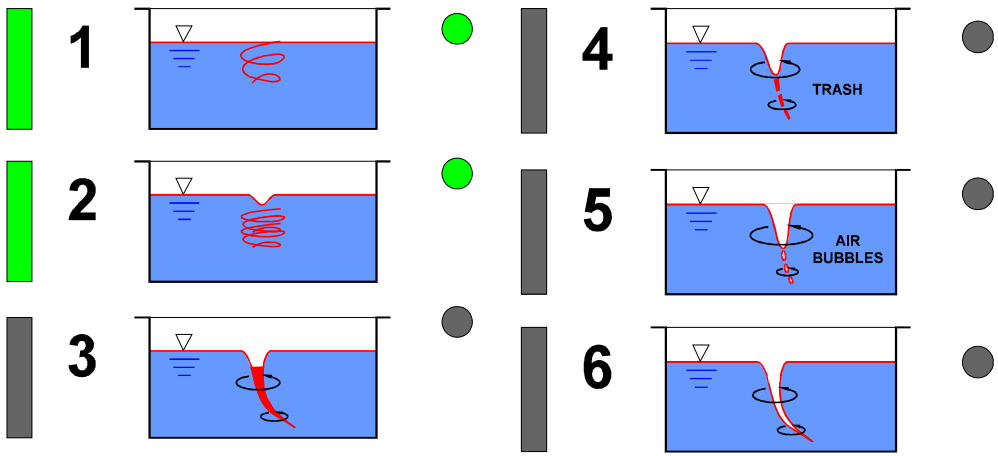

Risks of low head applications

- power loss due to algae and grass
  - the smaller the runner diameter the higher the risk
    - use a good trash rake (and cleaner)
    - can be optimised with a „flush“-control

Possible turbine types for low head application - AXIAL

- Axial type turbines
  - heads approx. 2 to 35 m
  - flows approx. 3 to 100 m^3/s
  - turbine speed varies approx. 100 … 500 rpm (low speed)
  - double or single-regulated
  - mostly Kaplan runner (3 to 6 blades)
  - generator direct-coupled or with a gear box
  - vertical, horizontal or slant arrangement
  - different runner diameters

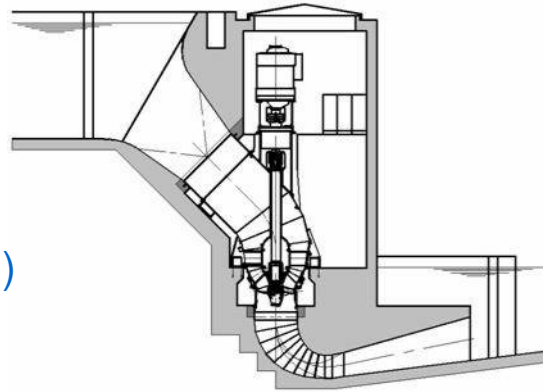

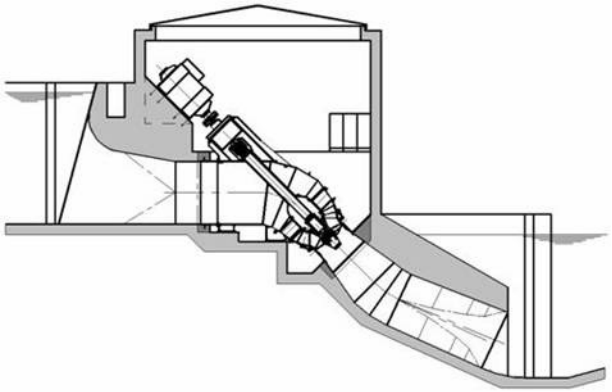

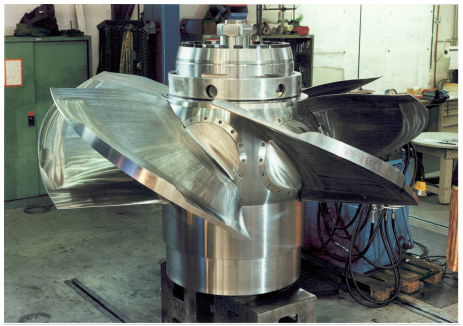

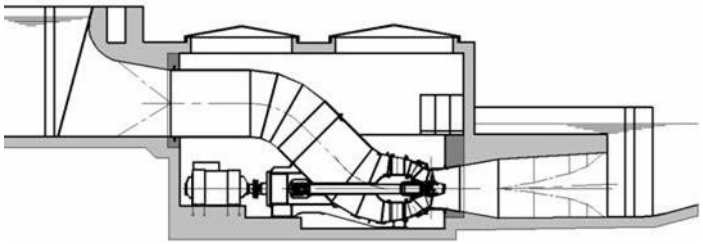

Possible turbine types for low head application - AXIAL

- Belt Drive Bulb Turbine (BDB) Q ~ 6 … 25m³/s H ~ 2 ... 4m

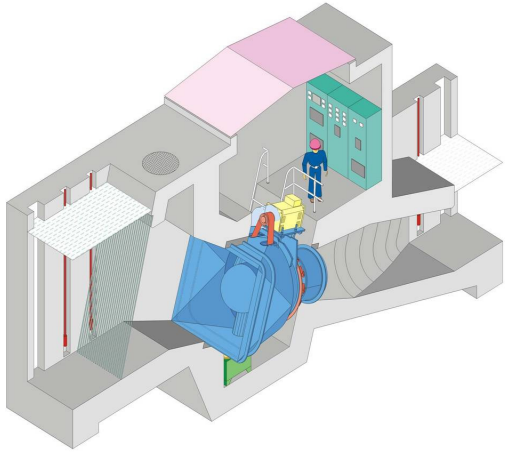

- Bevel Gear Bulb Turbine (BGB) Q ~ 3 … 45m³/s H ~ 2 …12m

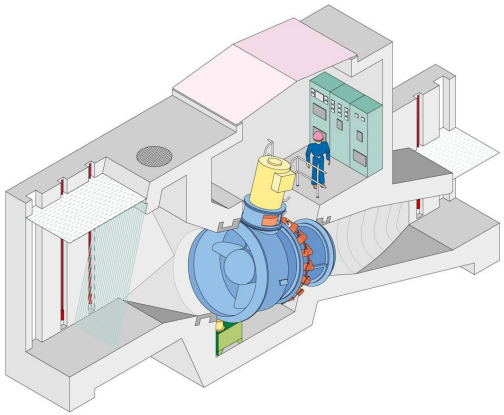

Possible turbine types for low head application - AXIAL

- Compact Axial Kaplan Turbine (CAK) Q ~ 6 … 60m³/s H ~ 2 … 12m

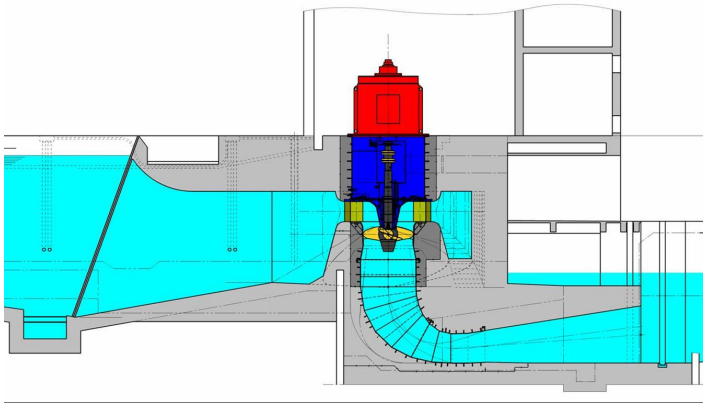

- PIT Turbine (PIT) Q ~ 20..100m³/s H ~ 2 … 12m

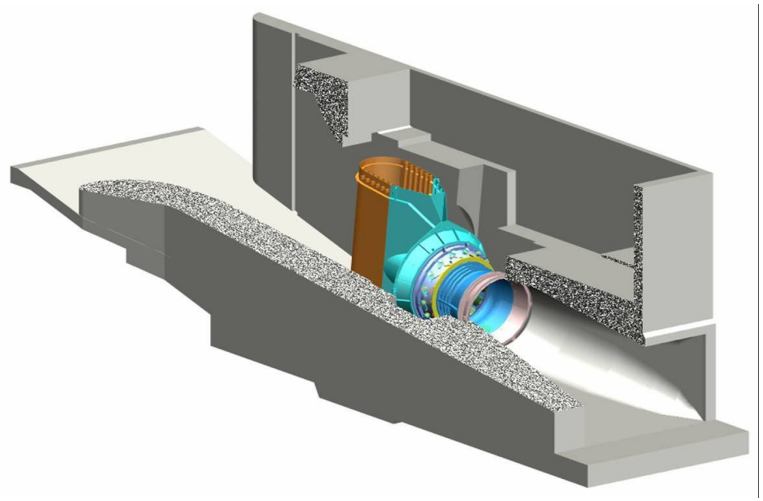

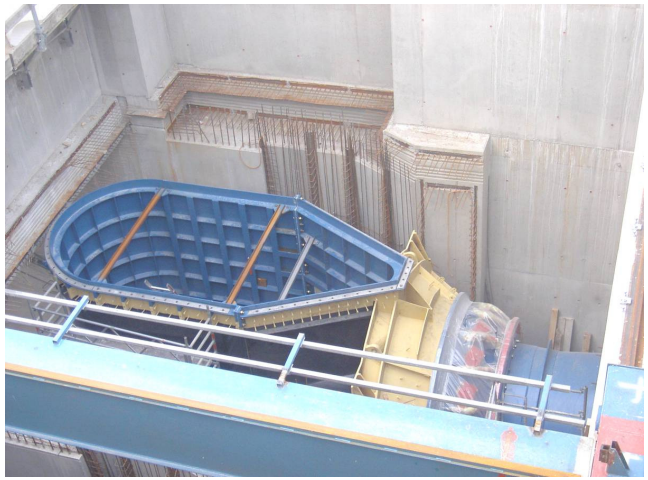

Possible turbine types for low head application - AXIAL

- Compact Axial Turbine (CAT)

Q ~ 3 … 68m³/s H ~ 15 … 35m

- Compact S-typeTurbine (STP)

Q ~ 3 … 65m³/s H ~ 15 … 25m

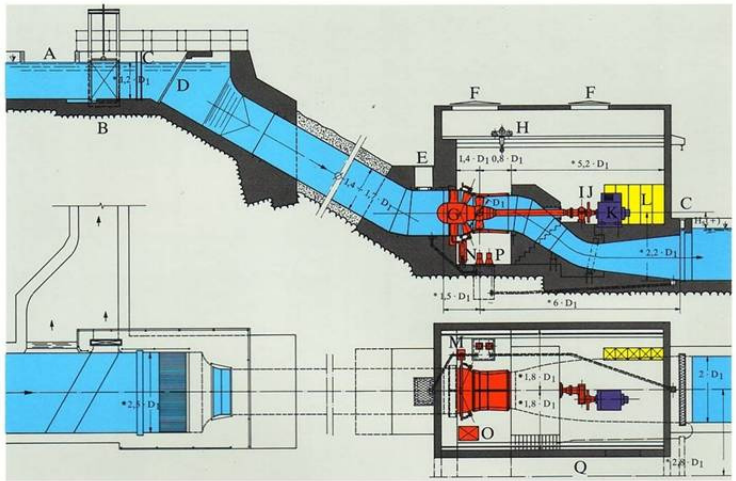

Possible turbine types for low head application - AXIAL

- Ecobulb-turbines (with direct coupled permanent magnet generator)

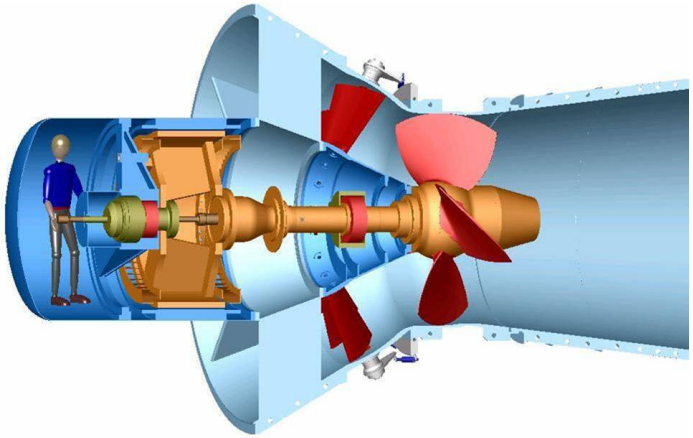

- Compact Bulb Turbine (with direct coupled synchronous generator)

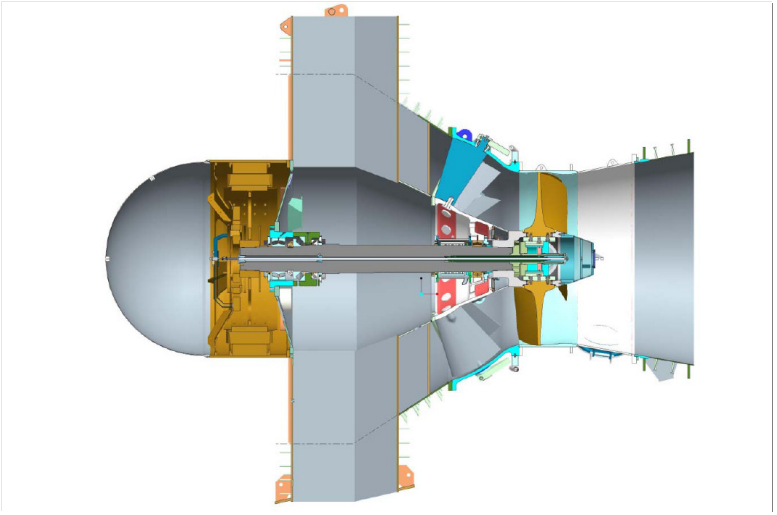

Possible turbine types for low head application - AXIAL

HYDROMATRIX®

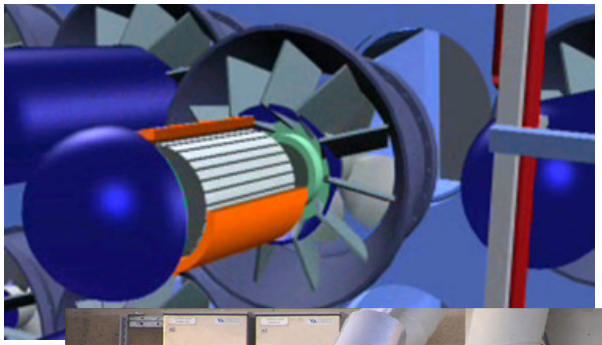

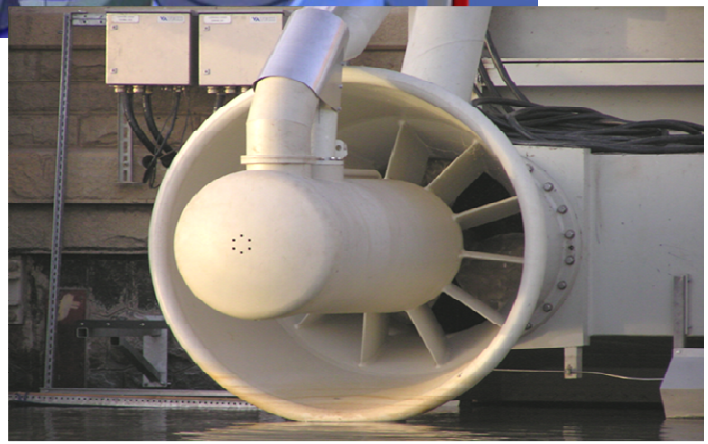

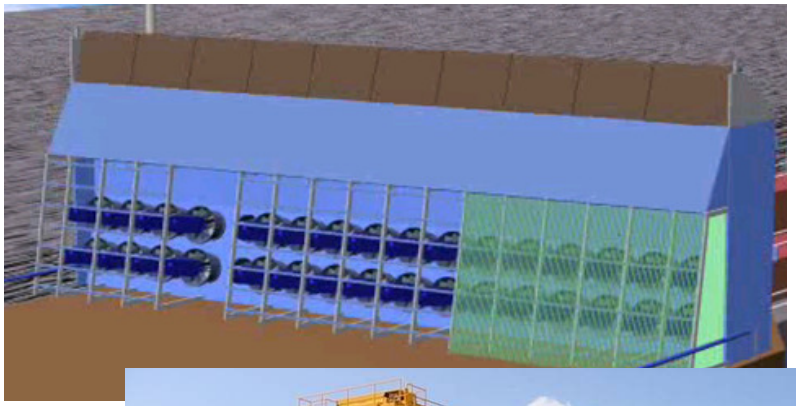

- **A solution for low head sites with existing dam and weir structures**
- **Available head from 3 m up to 10 m**
- **Modules of propeller turbine units (Bulb type)**

Fish-friendly turbine concept (axial) – some aspects

- Type – Bulb turbine
- low speed
- „large“ runner diameters

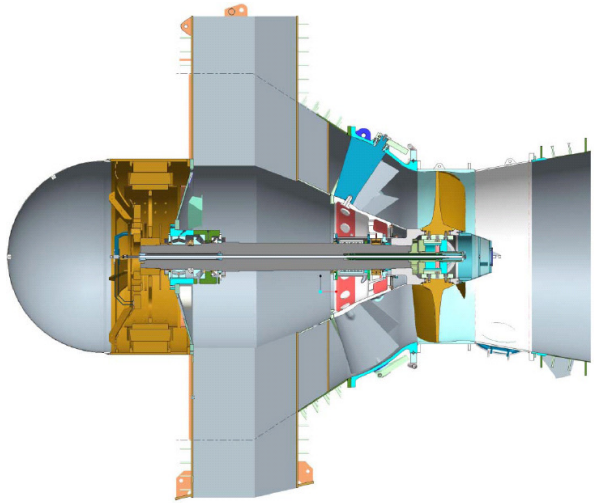

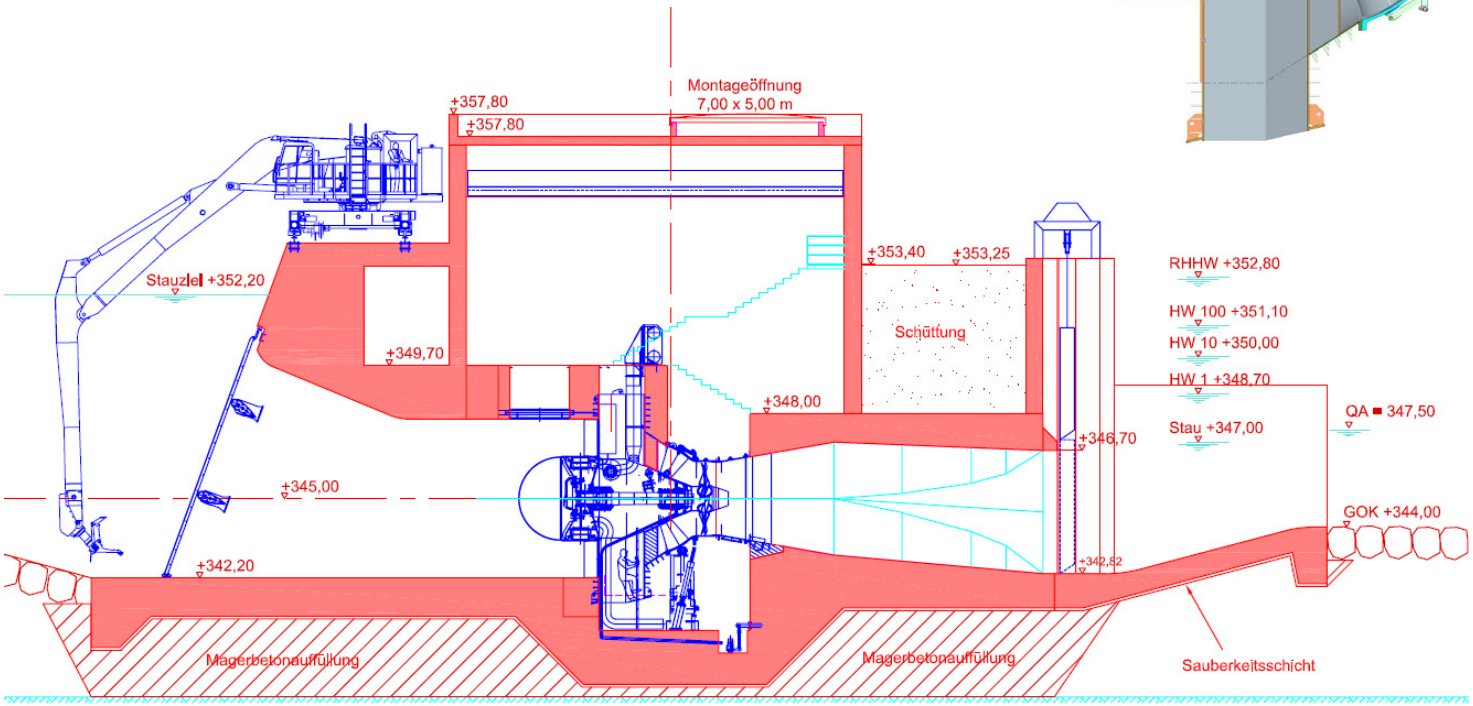

Fish-friendly turbine concept – some aspects

- reduced number of runner blades 3 instead of 4 (~50% more space)
- reduced hub size
- reduced blade length (~20% reduction)

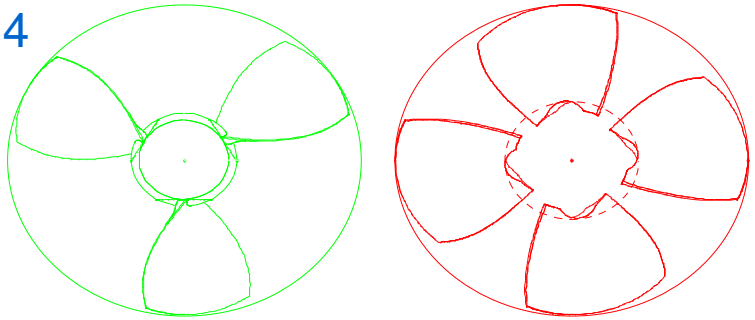

reduced number of runner bladdes

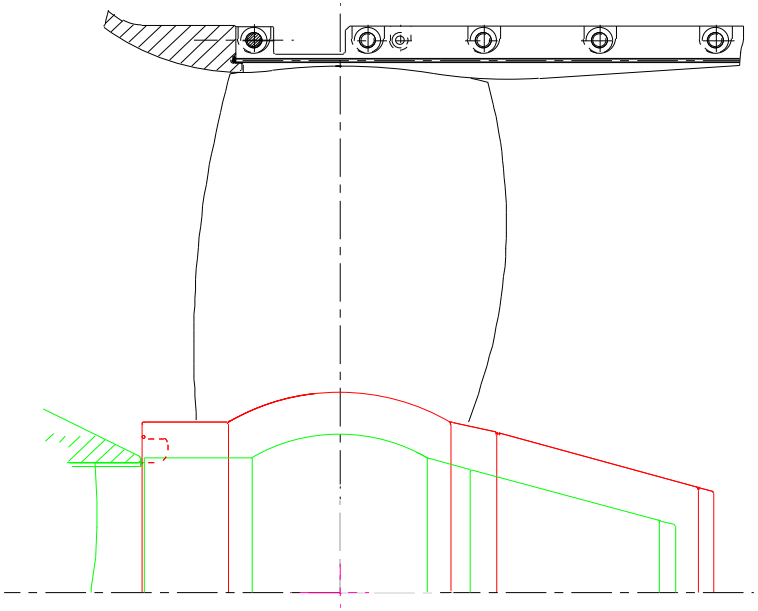

reduced hub size

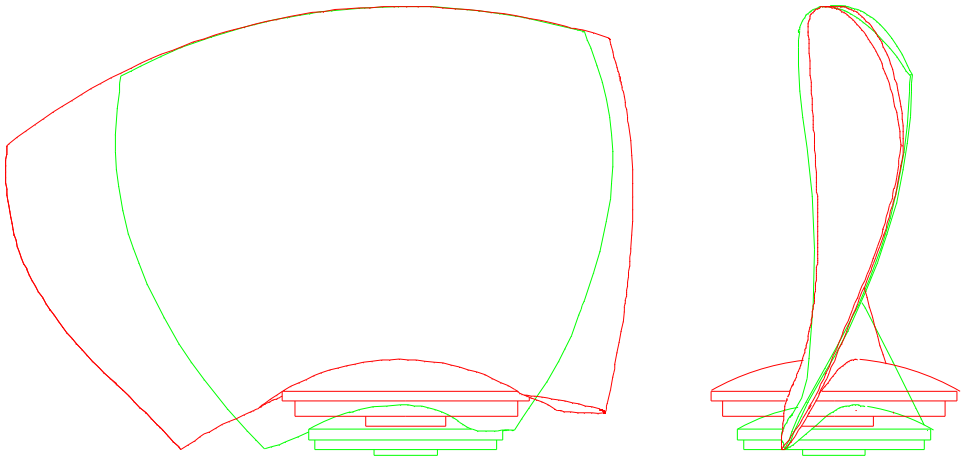

reduced blade length

Examples and references of low head applications

Plant	Country	No	Type	Runner-Ø [mm]	Output [MW/turb.]	Head [m]	Speed [rpm]	Year
Penig	Germany	1	Belt Drive Bulb	1,950	0.52	2.8	165/500	1997
Niklashausen	Germany	1	Belt Drive Bulb	1,450	0.21	2.2	208/755	1998
Talmühle	Germany	1	Bevel Gear Bulb	1,200	0.30	4.2	295/750	2000
Troja	Czech Rep.	2	Bevel Gear Bulb	2,600	1.00	2.9	145/600	2007
Sitterthal	Switzerland	1	Vertical Kaplan	1,200	0.44	6.5	333.3	2005
Vafos	Norway	1	Vertical Kaplan	2,600	4.80	13.3	187.5	2005
Rott	Austria	2	PIT	2,350	2.60	10.9	205/750	2003
Gottfrieding	Germany	1	PIT	3,650	5.10	6.1	136/600	2007
Giessen	Schweiz	1	Vertical CAT	800	0.94	24.4	750	1999
Healey Falls	Canada	1	Horizontal CAT	2,350	6.30	21.5	276.9	2008
Zwingen	Switzerland	2	S-Turbine	1,400	0.17	4.2	140/750	1928
Singatalur	India	4	S-Turbine	3,100	4.76	10.0	150/750	2005
Nisramont	Belgium	2	Francis	1,086	0.61	12.37	333/1000	2008

Examples and references of low head applications

- AND IN UNITED KINGDOM ?

  - since 1999: 10 different Axial turbines from 0.5 to 4.2 MW
  - since 1912: 13 Francis turbines from 0.1 to 7.5 MW (heads below 35m)
  - since 1906: 28 Pelton turbines from 0.6 to 106 MW (not low head)

Summary – low head turbine application

- „low“ heads roughly 2 to 35m
- large range of turbine products available (axial type and radial type)
- Often low speed turbines (approx. 100 to 500 rpm)
- low speed direct coupled generator > good but expensive
- Gear box can make a project feasible > reduction generator investment
- „Fish friendly“ turbine concepts
- risks
  - Power loss due to grass or algae
  - Incorrect Design on the intake/drafttube side – „high“ head loss